EPM-310-RS-485 User Manual

"Lankon" Engineering Group does not perform final assembly or manufacturing of any device. The Group is engaged solely in the design and production of embedded systems and electronic boards used in final devices, and also provides consulting services related to their use.

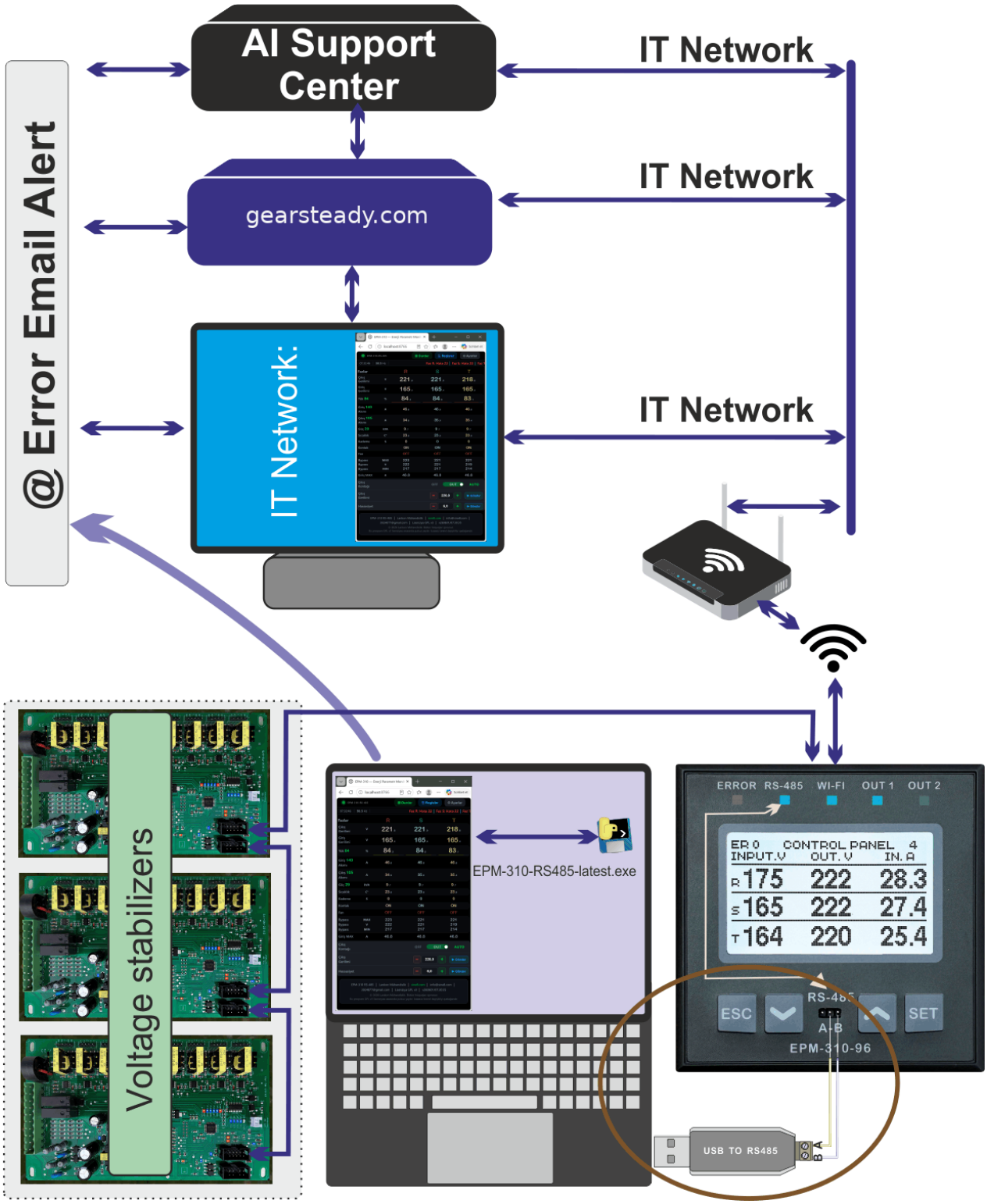

Fig. 1 — General block diagram EPM-310-RS-485

Lankon Engineering LLC https://gearsteady.com info@gearsteady.com

https://github.com/Sabir392/EPM-310-RS-485

Table of Contents

1.1. System Requirements ... 3
1.2. Program Installation ... 3
2. Startup ... 3
2.1. With EPM-310-RS-485.exe ... 3
2.3. Auto Shutdown (Inactivity) ... 4
3. Browser Interface ... 4
3.1. EPM-310-RS-485 — Main Panel ... 4
3.2. Settings Page ... 4
4.1. Modbus / Serial Parameters ... 5
4.2. COM Port Auto Scan ... 5
5. Real-Time Monitoring (Poll Loop) ... 6
5.1. Phase Parameters ... 6
5.2. Calculated Values ... 6
6.1. CSV File Columns ... 6
7. Register Table ... 7
8. Register Writing ... 8
8.1. Output Contact (Toggle) ... 8
8.2. Output Voltage Setting ... 8
8.3. Sensitivity Setting ... 8
9. Email Notifications ... 8
9.1. Email Parameters ... 8
9.2. Gmail App Password ... 9
9.3. Notification Types ... 9
10. HTTP API Documentation ... 10
10.1. GET Endpoints ... 10
10.2. POST Endpoints ... 10
11.1. Log Line Format ... 10
11.2. Error Code Description ... 10
12. Troubleshooting ... 10
13. Quick Start ... 10
14. AI — Error Code Dictionary for Artificial Intelligence ... 11

1. Introduction

EPM-310-RS-485 is a browser-based monitoring program for 1- and 3-phase voltage regulators (EPM-310-RS-485.exe). The program starts a local HTTP server (http://localhost:8766/) and communicates with the EPM-310 device via RS-485 Modbus RTU protocol. When a fault occurs or is cleared, the program automatically sends an email notification.

The program provides the following features:

- Real-time electrical parameter monitoring for phases: R, S, T
- Parameter modification via browser interface

- Automatic data logging to file — CSV Auto
- Error Email Alert — email notification on fault
- Real-time chart — visual monitoring of parameters
- Export to Excel — downloading data in Excel format
- Register writing — output voltage, sensitivity, contact control
- COM port auto-detection (auto-scan)

1.1. System Requirements

Requirement	Meaning	Note
Operating system	Windows 10/11 (64-bit)	EXE is for Windows only
RS-485 → USB	Any CH340/FTDI adapter	Must create a COM port
EPM-310 device	Modbus RTU active	Baud: 38400, Slave ID: 1
Browser	Chrome / Edge / Firefox	http://localhost:8766/

1.2. Program Installation

Download the program from the following address:

https://github.com/Sabir392/EPM-310-RS485/blob/main/EPM-310-RS485.exe
https://gearsteady.com/documents/EPM-310-RS-485.exe

1. Copy the downloaded EPM-310-RS-485.exe file to your desired folder (e.g.: C:\EPM-310-RS-485)
2. Locate the EPM-310-RS-485.exe file in the folder
3. Double-clicking EPM-310-RS-485.exe automatically opens the browser

The program requires no installation — runs in portable mode.

2. Startup

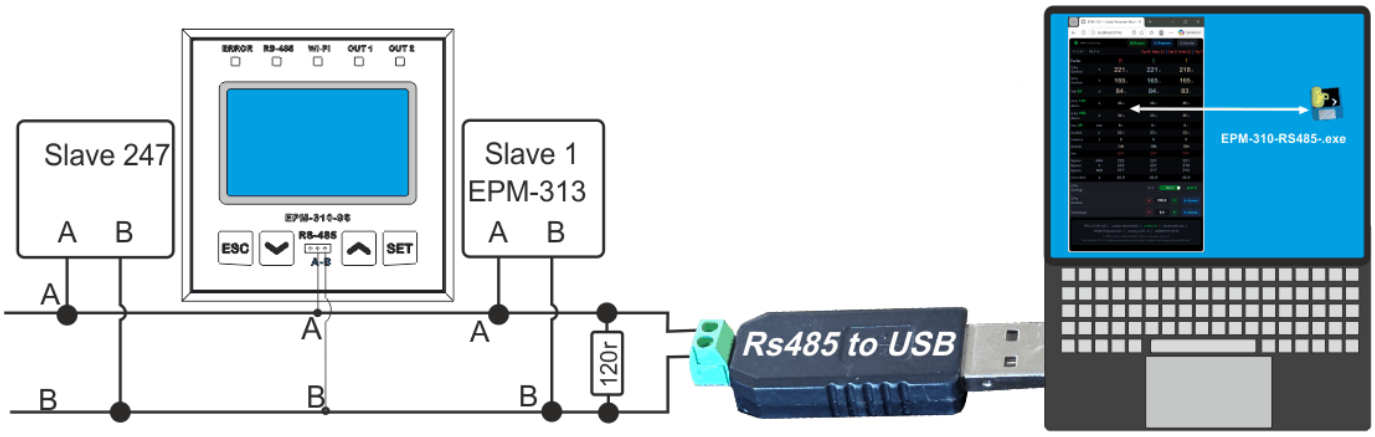

Fig. 2 — Connection diagram of EPM-310 device to computer via RS-485

2.1. With EPM-310-RS-485.exe

4. Connect the RS-485 → USB converter to the computer
5. Connect the EPM-310 device to the converter via RS-485 A/B terminals
6. Launch by double-clicking the EPM-310-RS-485.exe file.
7. Browser opens automatically: http://localhost:8766/
8. To close, close the cmd window or press Ctrl+C

The following files may be created in the folder where the EXE is located:

File	Purpose
epm_settings.json	Program parameters — COM port, speed, language, email. Created automatically on first run.
error_log.txt	Error log — automatically saved when a fault occurs or connection is lost.
epm_log_DATE.csv	CSV Auto — created when "Auto file logging" is enabled, stores measurement data.

On startup, the program checks the COM port in the epm_settings.json file.
If the port is not found in the system — auto scan is started.

2.3. Auto Shutdown (Inactivity)

If the browser does not send a /data request within 3 seconds, the program closes the port and terminates. Keep the browser tab open.

3. Browser Interface

Two main pages are available at http://localhost:8766/:

URL	Page	Content
/ (EPM-310-RS-485)	Main monitoring panel	Real-time phase data, CSV, writing
/epm_settings.html	Settings page	Connection parameters, language, email

3.1. EPM-310-RS-485 — Main Panel

- Real-time electrical parameters for phases R, S, T
- Connection indicator (green LED — connected, red — no connection)
- Start / Stop buttons — query management
- Chart button — real-time chart window
- "Auto file logging" toggle — automatic recording
- Control panel — output contact, voltage, sensitivity
- Clock and query statistics

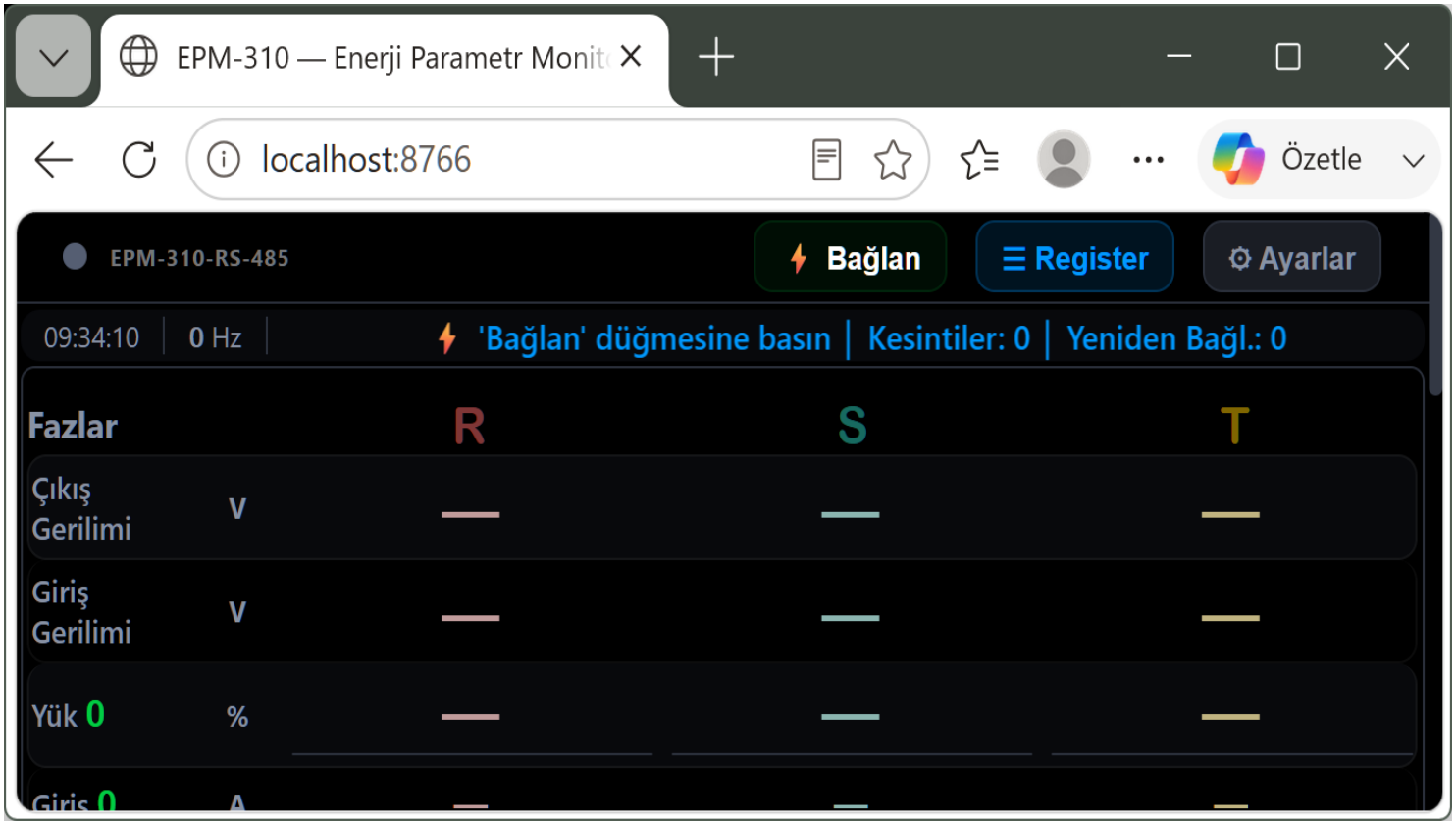

Fig. 3 — Main panel EPM-310-RS-485 (http://localhost:8766/)

3.2. Settings Page

Opens from http://localhost:8766/epm_settings.html. This page configures: COM port and speed (baud rate), Slave ID, interface language, CSV Auto (automatic data logging), Error Email Alert (email on fault), EPM-310 sender address, recipient addresses — device owner and AI management center.ate), Slave ID, interface language, CSV Auto (automatic data logging), Error Email Alert (email on fault), EPM-310 sender address, recipient addresses — device owner and AI management center.

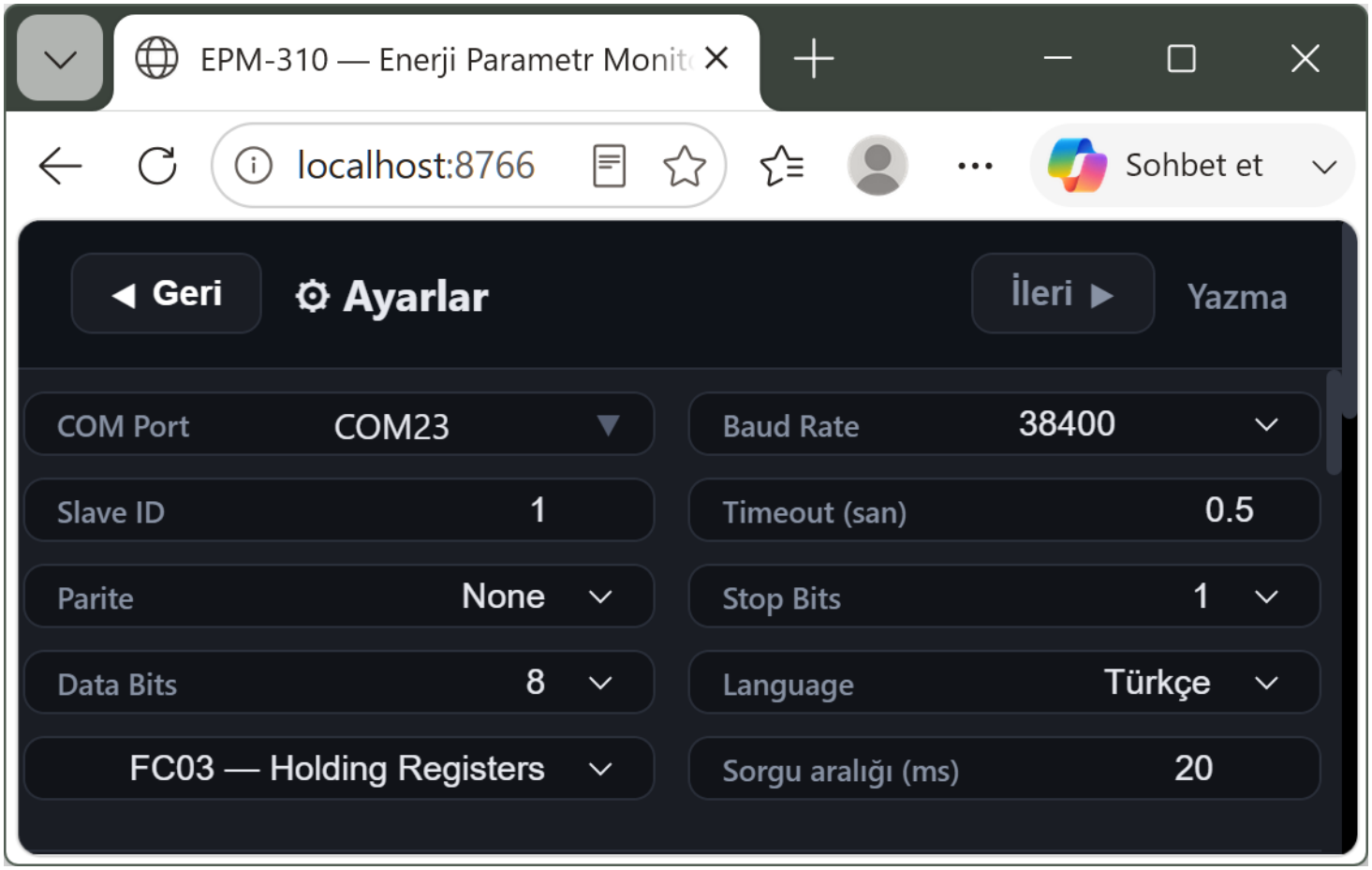

Fig. 4 — Settings page (/epm_settings.html)

4. Connection Parameters

All parameters are stored in the epm_settings.json file.

4.1. Modbus / Serial Parameters

Parameter	Default	Description
port	COM11	COM port of the RS-485 converter
baud	38400	Transmission speed (baud rate)
data_bits	8	Data bits
parity	None	Parity: None / Even / Odd
stop_bits	1	Stop bits: 1 or 2
timeout	1	Response timeout (seconds)
slave_id	1	Modbus Slave address (Slave ID)
fc	FC03	FC03 (Holding) or FC04 (Input)
start_addr	0	First register address to read
reg_count	33	Number of registers to read
interval	100	Interval between queries (ms)

4.2. COM Port Auto Scan

9. All available COM ports are listed
10. A Modbus query is sent to each port (3 attempts)
11. When a response is received — the settings file is updated
12. Manual scan can also be started from the browser via /scan API

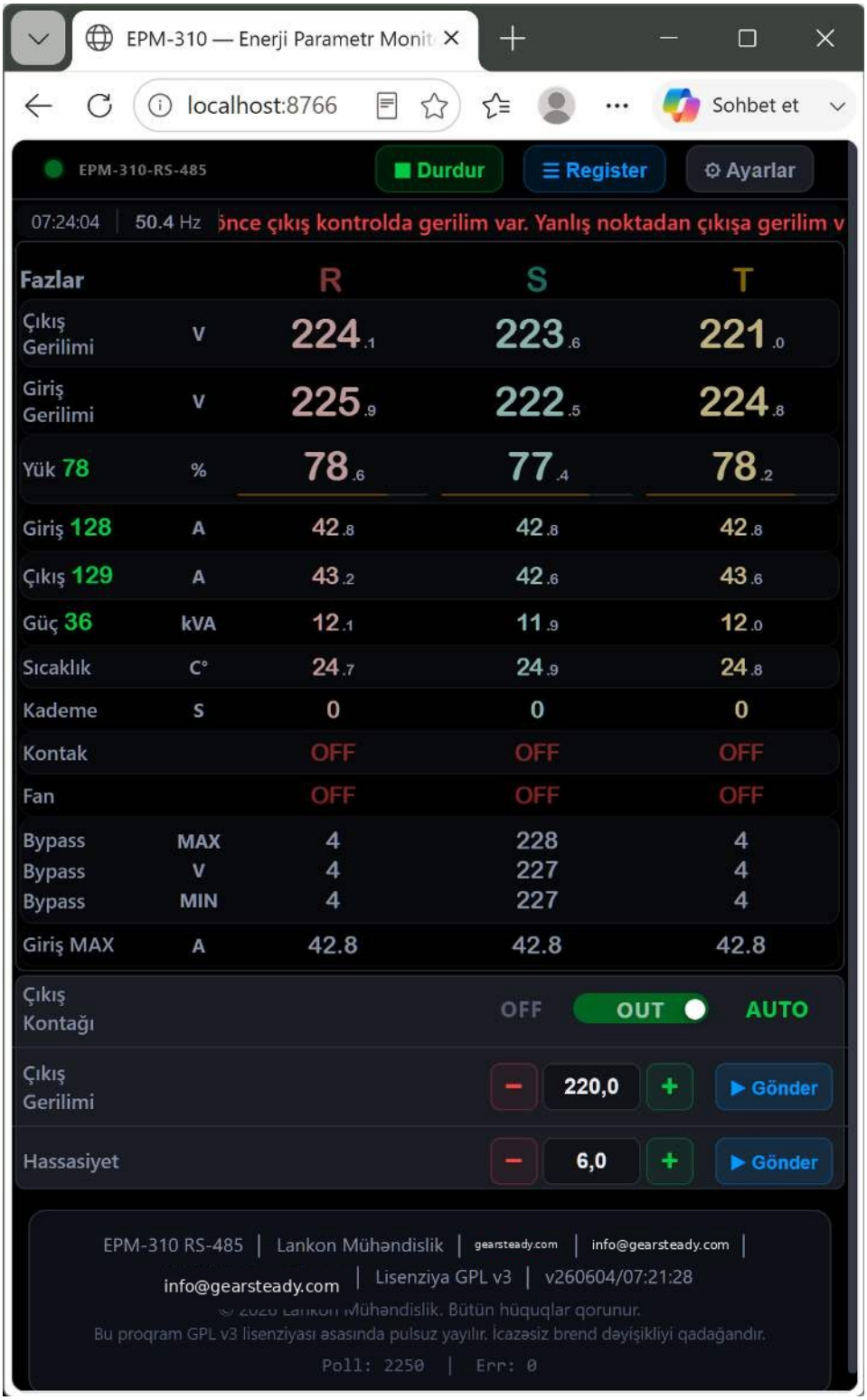

5. Real-Time Monitoring (Poll Loop)

After the query is started, the program reads data from the device cyclically at the specified interval (default 100 ms).

5.1. Phase Parameters

Parameter	Register	Note
Output voltage (V)	Reg 0/10/20	÷10 — e.g. 2198 → 219.8V
Input voltage (V)	Reg 1/11/21	÷10
Bypass voltage (V)	Reg 2/12/22	÷10
Input current (A)	Reg 3/13/23	÷10
Error code	Reg 4/14/24	0 = normal; >0 = error
Frequency (Hz)	Reg 5/15/25	÷10
Temperature (°C)	Reg 6/16/26	÷10
Load (%)	Reg 7/17/27	÷10
Step count	Reg 8/18/28	step > 99 → contact closed

Fig. 5 — Monitoring panel — phase electrical parameters R, S, T real-time

5.2. Calculated Values

- Output current (A): cur_out = input_current × input_voltage / output_voltage
- Power (kVA): power_kva = cur_out × output_voltage / 0.8 / 1000
- Fan: when error_code > 99 — fan = 1 (active)

6. CSV Auto Log

When the «CSV» button is enabledCSVthe program automatically logs each measurement to the EPM-310-RSCSV file. CSV

File name: epm_log_YYYYMMDD_HHMMSS.csv (created in the program folder).

6.1. CSV File Columns

Column	Source	Description
Time	Timestamp	YYYY-MM-DD HH:MM:SS
R-Output(V)	Reg 0 ÷ 10	Phase R output voltage
R-Input(V)	Reg 1 ÷ 10	Phase R input voltage
R-Bypass(V)	Reg 2 ÷ 10	Bypass voltage
R-Current(A)	Reg 3 ÷ 10	Input current
R-OutputC(A)	Calculated	Output current
R-Power(kVA)	Calculated	Apparent power
R-Tmp(°C)	Reg 6 ÷ 10	Temperature
R-Load(%)	Reg 7 ÷ 10	Load (%)

R-Steps	Reg 8	Step count
S, T ...	Same structure	S:Reg10-18, T:Reg20-28
Frequency(Hz)	Reg 5 ÷ 10	Grid frequency

7. Register Table

Protocol: FC03 — Read Holding Registers. Default: start_addr=0, reg_count=33, Slave ID=1, Baud=38400...

Reg. №		0x	Phase	Name	Note / Conversion
0		0x0000	R	Output	÷10 → V (Output gerilimi)
1		0x0001	R	Introduction	÷10 → V (Input voltage)
2		0x0002	R	Bypass	÷10 → V (Bypass voltage)
3		0x0003	R	Current	÷10 → A (Current)
4		0x0004	R	Error + Fan	≤99 → error code, fan=0; >99 → fan=1, ec=value−100; see section 14
5		0x0005	R	Frequency	÷10 → Hz (e.g.: 503 = 50.3 Hz)
6		0x0006	R	Temperature	÷10 → °C
7		0x0007	R	Load	÷10 → % (e.g.: 1111 = 111.1%)
8		0x0008	R	Step + Contact	≤99 → contact=0, steps=value; >99 → contact=1, steps=value−100
9		0x0009	R	Fan	0 = fan stopped, 1 = running
10		0x000A	S	Output	÷10 → V
11		0x000B	S	Introduction	÷10 → V
12		0x000C	S	Bypass	÷10 → V
13		0x000D	S	Current	÷10 → A
14		0x000E	S	Error + Fan	Same as Phase R (register 4 rule)
15		0x000F	S	ID_EPM-310	Constant: 0xBD5C (48476) — device identifier
16		0x0010	S	Temperature	÷10 → °C
17		0x0011	S	Load	÷10 → %
18		0x0012	S	Step + Contact	Same as Phase R (register 8 rule)
19		0x0013	S	Fan	0 = stopped, 1 = running
20		0x0014	T	Output	÷10 → V
21		0x0015	T	Introduction	÷10 → V
22		0x0016	T	Bypass	÷10 → V
23		0x0017	T	Current	÷10 → A
24		0x0018	T	Error + Fan	Same as Phase R (register 4 rule)
25		0x0019	T	Frequency	÷10 → Hz
26		0x001A	T	Temperature	÷10 → °C
27		0x001B	T	Load	÷10 → %
28		0x001C	T	Step + Contact	Same as Phase R (register 8 rule)
29		0x001D	T	Fan	0 = stopped, 1 = running
30		0x001E	—	?	➜ Read by program; ignored if 0
31		0x001F	—	?	➜ Read by program
32		0x0020	—	?	➜ Read by program

> ⚠ **Note — For Artificial Intelligence Integration**
>
> When integrating artificial intelligence into the system, adding only the register table to the knowledge base is not sufficient. For correct decisions, **all user manuals must be**loaded into the AI knowledge base:
>
> 1. EPM-310-RS-485 user manual
> 2. EPM-310-Wi-Fi user manual
> 3. EPM-310 user manual
> 4. SM-26_3 user manual

8. Register Writing

From the control panel of EPM-310-RS-485, the following values can be written directly to the device (FC06 — Write Single Register).

8.1. Output Contact (Toggle)

Parameter	Meaning	Note
Register address	91	Modbus register
ON value	1444	Close contact (output active)
OFF value	1333	Open contact (output passive)

8.2. Output Voltage Setting

Parameter	Meaning	Note
Register address	92	Modbus register
Range	90.0 — 240.0 V	Acceptable range
Minimum step	1 V	
Maximum step	10 V	
Value to write	voltage × 10	220V → register = 2200

8.3. Sensitivity Setting

Parameter	Meaning	Note
Register address	93	Modbus register
Range	1.2 — 30.0	Sensitivity value
Minimum step	0.1	
Maximum step	1.0	
Value to write	value × 10	5.0 → register = 50

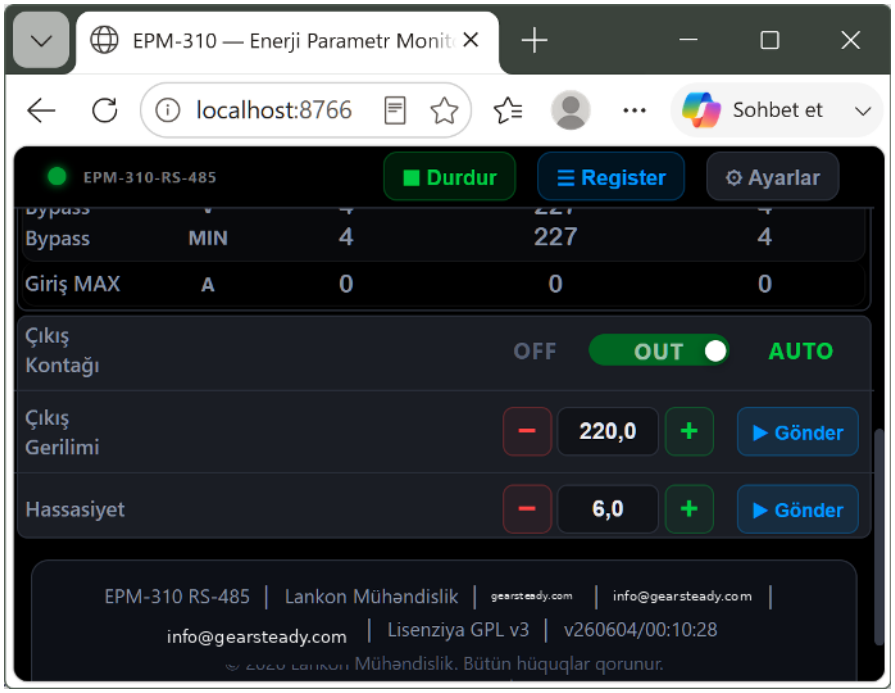

Fig. 6 — Control panel — output contact, voltage, sensitivity

WARNING: In case of a write error, HTTP 500 response is returned.
If the serial port is not connected — a "Port not connected" message is sent.

9. Email Notifications

The program can send an email notification when the fault status changes or the connection is lost.

9.1. Email Parameters

Parameter	Default	Description
email_enabled	false	true — notifications active
email_smtp	smtp.gmail.com	SMTP server address
email_port	587	SMTP port (587 for TLS)

email_user		EPM-310 sender — sender email address
email_pass	App Password	Gmail App Password
email_to1		Device owner (first recipient)
email_to2	—	AI center (second recipient, optional)

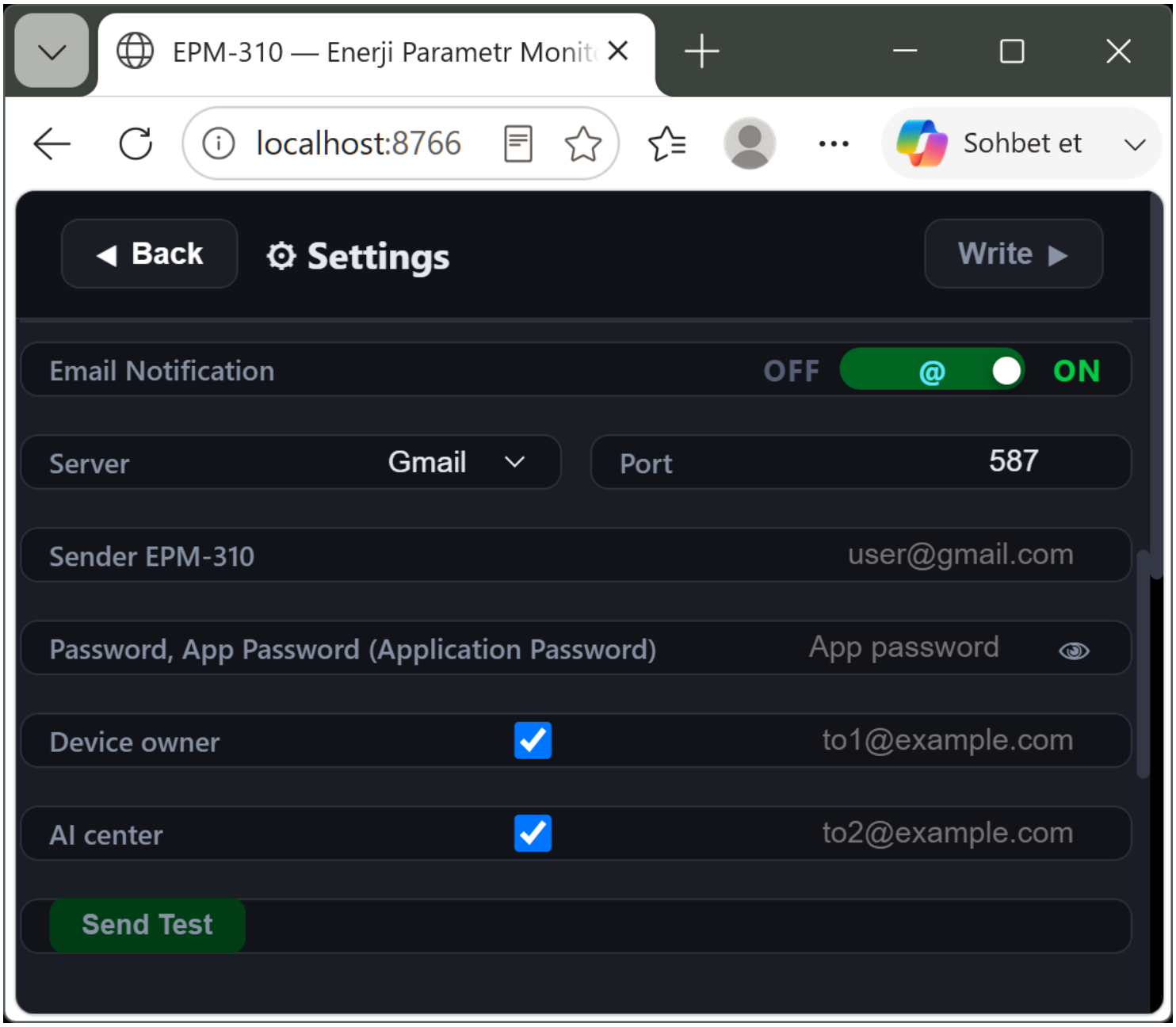

Fig. 7 — Settings page — email Notifications configuration

9.2. Gmail App Password

WARNING: Regular Gmail password does not work.
must be created. App Password

13. Log in to your Google account → Google → myaccount.google.com
14. Security → Enable 2-Step Verification
15. Search for «App passwords»
16. App name: EPM-310 → click the «Create» button
17. Enter the generated 16-character password into the “Password (App Password)” field

9.3. Notification Types

Type	Condition	Message
Error change	When error code changes	E.g.: 0→5 or 5→0
Connection loss	When port does not respond	NO_CON
Connection restored	When reconnected	RESTORED: OK

10. HTTP API Documentation

Works across all API endpoints. http://localhost:8766/.

10.1. GET Endpoints

Endpoint	Response	Description
GET /	EPM-310-RS-485 HTML	epm_dashboard.html veya .enc
GET /data	JSON	All phase parameters + status
GET /settings	JSON	epm_settings.json content
GET /ports	JSON	{ports:[...], current:'COM11'}
GET /csv_status	JSON	{active, path, rows}
GET /export_csv	CSV file	Content-Disposition: attachment
GET /filetime	JSON	EPM-310-RS-485 file date

10.2. POST Endpoints

Endpoint	Request data	Action
POST /settings	{key: value}	Save settings
POST /control	{"action": "start"}	Start query
POST /control	{"action": "stop"}	Stop query
POST /write	{"addr":91,"value":1444}	Write register (FC06)
POST /csv	{"active": true/false}	Start/stop CSV logging
POST /email-test	{}	Send test email
POST /scan	{}	Start COM port scan

11.1. Log Line Format

```
ID EPM-310-1: 2026-05-11 : 14 : 22 : 03  :  Error : 105
ID EPM-310-1: 2026-05-11 : 14 : 25 : 18  :  RESTORED : OK
ID EPM-310-1: 2026-05-11 : 14 : 30 : 00  :  Error : NO_CON
```

11.2. Error Code Description

Code	Meaning	Description
0	Normal operation	No error
101-199	Phase R error	R error code + 100
201-299	Phase S error	S error code + 200
301-399	Phase T error	T error code + 300
NO_CON	Connection lost	Serial port not responding

12. Troubleshooting

Problem	Solution	Note
Browser does not open	Enter http://localhost:8766/ manually	webbrowser.open() delay
Port 8766 is in use	Task Manager → terminate the old EPM-310-RS-485.exe process	Restart the computer
COM port not found	Check the USB Serial adapter in Device Manager	CH340 driver must be installed
CRC error	Check cable length (max. 1200m) and termination	A/B terminals must not be swapped
No data received (0)	Slave ID, baud, FC code must be correct	start_addr:0, reg_count:33
Email not being sent	Was the App Password entered correctly?	2-Step Verification must be enabled
Program closes by itself	Happens when browser does not send /data request for 3 seconds	Keep the tab open
CSV is empty	Press the CSV button after starting the query	CSV is not recorded if the query is not active
Windows blocks the EXE file from running (Smart App Control)	Settings → Privacy & security → Windows Security → App & browser control → Smart App Control settings → Turn off	After turning it off, re-enabling it usually requires resetting Windows

13. Quick Start

18. Connect the RS-485 → USB converter to the computer, connect the EPM-310 device to the converter via A/B terminals
19. Launch by double-clicking the EPM-310-RS-485.exe file.

20. Browser opens automatically: http://localhost:8766/
21. Select the COM port on the settings page or press the «Scan» button
22. Baud rate: 38400, Slave ID: 1 (factory parameters)
23. Press the «Connect» button — green LED lights up
24. Press the «Start» button — real-time data appears
25. Enable the «CSV» button for CSV logging
26. Press the «Chart» button to view the chart
27. Press the «Stop» button or close the browser tab to stop

If the browser does not send a request within 3 seconds, the program terminates.
Keep the browser tab open for uninterrupted operation.

14. AI — Error Code Dictionary for Artificial Intelligence

In case of error, ER=XX (single phase) or ER=1XX / 2XX / 3XX (three phase) is displayed on the screen.n. Example: single phase ER=32; three phase R1 ER=132, S2 ER=232, T3 ER=332. The AI system can detect the fault and make a decision based on this table.he fault and make a decision based on this table.

Error №	LCD Message	On EPM-310 'ESCESC' button screen description EPM-310
1–5	PRIMARY THYRISTOR FAULT OCCURRED	Check the «Gate» cable.
5–10	SECONDARY THYRISTOR FAULT OCCURRED	Check the «Gate» cable.
11–13	—	Reserved (not used).
14	CANNOT READ DATA FROM TEMPERATURE SENSOR	Cannot read data from temperature sensor (NTC-10k). Sensor cable is incorrectly connected.
15	SYSTEM OVERHEATED OR COOLING INSUFFICIENT	Ambient temperature is too high or cooling fan is not working.
16	—	Reserved (not used).
17	OUTPUT CONTROL MEASUREMENT POINT VOLTAGE LOW	Output voltage is too low or check Menu-12 value. The value must be appropriate for the transformer in use.
18	INPUT VOLTAGE LOW IN CONTROL	Input voltage is too low or check Menu-12 value.
19	INPUT VOLTAGE HIGH IN CONTROL	Input voltage is too high. Check Menu 9, 10, 11, 12 values.
20	VOLTAGE PRESENT AT OUTPUT CONTROL BEFORE THYRISTOR ACTIVATION	Voltage applied to output from wrong point; or check Menu-13 if «BOOSTER TRANSFORMER» is used.
21	VOLTAGE PRESENT AT BYPASS CONTROL TERMINAL BEFORE CONTACTOR ACTIVATION	Voltage applied to SM-2603 board J3 terminal from wrong point instead of BYPASS. Voltage must be taken from the point after the contactor of the same phase.
22	BOTH OUTPUT AND BYPASS CONTROL VOLTAGE PRESENT BEFORE CONTACTOR ACTIVATION AT TERMINALS	Voltage applied to SM-2603 board J3 terminal from wrong point instead of both BYPASS and output control.
23	VOLTAGE PRESENT AT BYPASS CONTROL TERMINAL BEFORE CONTACTOR ACTIVATION	Voltage detected at BYPASS position after thyristor activation — there should be no voltage here at this stage.
24	OUTPUT CONTROL VOLTAGE LOW	Input voltage is too low or Menu-9 value is too high.
25	OUTPUT CONTROL VOLTAGE HIGH	Input voltage is too high or Menu-9 value is too low.
26	BYPASS AND OUTPUT CONTROL VOLTAGES ARE NOT EQUAL	Voltage applied to SM-2603 board J3 terminal from wrong point or different phase.

Error №	LCD Message	On EPM-310 'ESCESC' button screen description EPM-310
27	OUTPUT VOLTAGE LOW FOR BOOSTER TRANSFORMER	A different transformer type is active in Menu-13.
28	HIGH FREQUENCY	The upper frequency protection value in Menu-21 is set higher than the input frequency.
29	LOW FREQUENCY	The lower frequency protection value in Menu-22 is set lower than the input frequency.
30	OUTPUT VOLTAGE NOT STABILIZED	Menu-10 value is not appropriate or transformer terminals are incorrectly connected. Apply the Menu-26 procedure.
31	NO-LOAD CURRENT IS HIGH	The current drawn before load is connected through the contactor exceeds 5% of the load — error in transformer calculation.
32	HIGH CURRENT PROTECTION LIMIT EXCEEDED	Load exceeds the device's capacity limit by 100%. Reduce the load.
33	CURRENT VALUE EXCEEDED CREST FACTOR X3 LIMIT	Load exceeds the device's capacity limit by 300%. Reduce the load.
34	CURRENT AMPLITUDE IS EXCESSIVELY HIGH TO MEASURE	Output is overloaded or current transformer is not suitable. System retries after 3 seconds the number of times specified in Menu-14.
35	NEUTRAL INPUT VOLTAGE NOT SUITABLE FOR MEASUREMENT	Input voltage exceeds 300V or neutral line is not suitable. System activates if conditions normalize after 3 minutes.tem devreye girer.
36	NEUTRAL OUTPUT VOLTAGE NOT SUITABLE FOR MEASUREMENT	Output voltage exceeds 300V or neutral line is not suitable. System activates if conditions normalize after 3 minutes.istem devreye girer.
37	NEUTRAL BYPASS VOLTAGE NOT SUITABLE FOR MEASUREMENT	Voltage at bypass output exceeds 300V or neutral is not suitable. System activates if conditions normalize after 3 minutes.
38	—	Reserved (not used).
39	RE-ENERGIZATION LIMIT EXCEEDED (MENU NO.14)	The limit for applying voltage to the output has been exceeded. Press ESC + SET simultaneously to restart the system.
40	—	Reserved (not used).
41	REMOTE CONTROL	Device has been shut down via the internet. Output voltage will not be applied even if power is restored.
42	DEVICE SET AS 3-PHASE, NO RS-232 DATA FROM PHASE 2	The «UART1» output of the SM-2603 board connected to the display is not connected to the «UART0» input of the middle phase board.
43	DEVICE SET AS 3-PHASE, NO RS-232 DATA FROM PHASE 3	Output «UART1» output is not connected to the «UART0» input of the last board.

15. License and Copyright

This program is distributed free of charge under the GNU General Public License (GPL v3).

Author	Lankon Engineering LLC
Website 1	https://gearsteady.com/documents
Website 2	https://github.com/Sabir392/EPM-310-RS-485
E-mail	info@gearsteady.com
License	GPL v3 — https://www.gnu.org/licenses/gpl-3.0.html
Version	v260511-EN-WEB | 2026

The following actions are PROHIBITED:

- Publishing the program under your own name
- Deleting or modifying the «Lankon» trademark

- Selling for commercial purposes without copyright notice

© 2026 Lankon Engineering LLC. All rights reserved.